100140

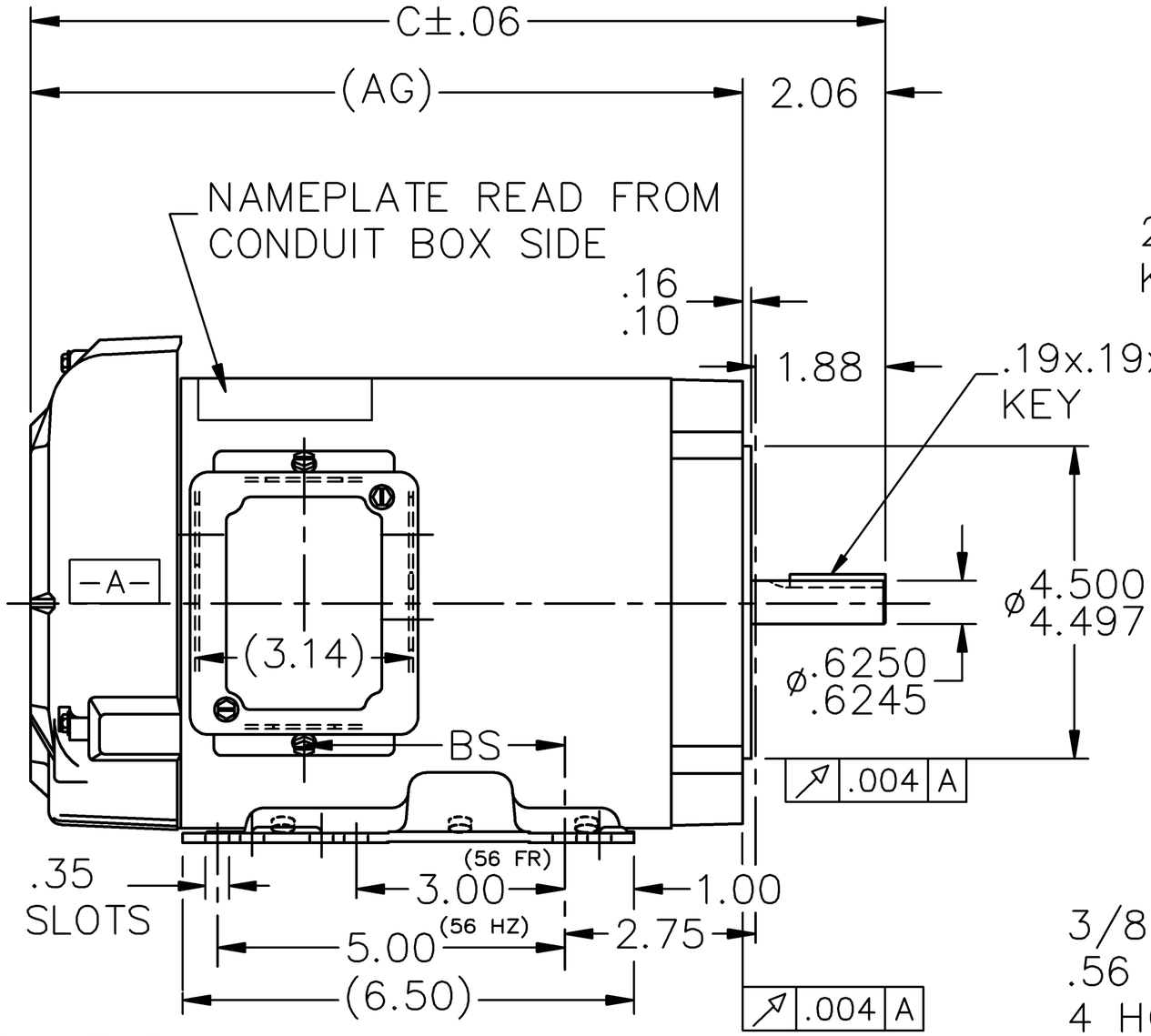

TERM. END

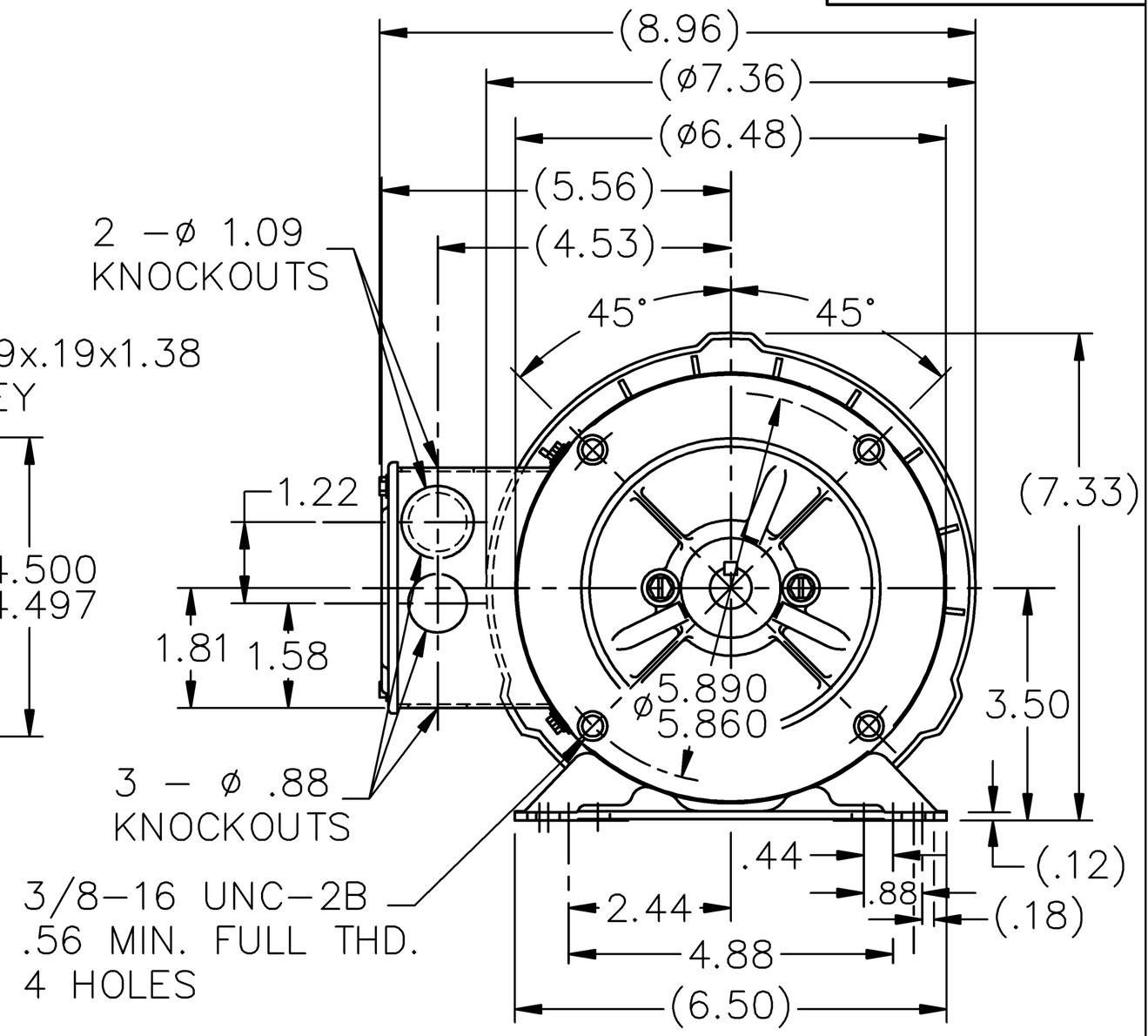

DASH	FRAME	C	AG	BS
706	56-70	12.31	10.25	3.75
756	"-75	12.81	10.75	4.25
806	"-80	13.31	11.25	4.75
856	"-85	13.81	11.75	5.25

NOTES:
1. CONDUIT BOX CAN BE ROTATED 180°
2. BASE IS REMOVEABLE

NO.	REVISION	BY & DATE	CHK
5	FIXED TABULATED CHART	TAT 03-21-2005	ML
4	REDRAWN IN AUTOCAD	TAT 06-29-2004	ML
3	REDRAWN ON CADD	BLR 05-27-1997	

TOLERANCES UNLESS SPECIFIED

DEC.	INCHES
.X	±.1
.XX	±.03
.XXX	±.005
.XXXX	±.0005
ANG	±7'30"

MARATHON ELECTRIC

DRAWN BLR 05-27-1997
CHK ML 05-27-1997
APPD GK 05-27-1997

TITLE OUTLINE
56 FR. - BB - TEFC - 3ø - 'C' FACE

SCALE 5=16
REF
FMF
PREV

MAT'L.
FINISH

THIS DRAWING IN DESIGN AND DETAIL IS OUR PROPERTY AND MUST NOT BE USED EXCEPT IN CONNECTION WITH OUR WORK ALL RIGHTS OF DESIGN AND INVENTION ARE RESERVED
THIS IS AN ELECTRONICALLY GENERATED DOCUMENT - DO NOT SCALE THIS PRINT

RFP
DIST WP

CAD FILE 100140

SIZE A | DRAWING NO. 100140 | PAGE OF | REV. 5