SS86562

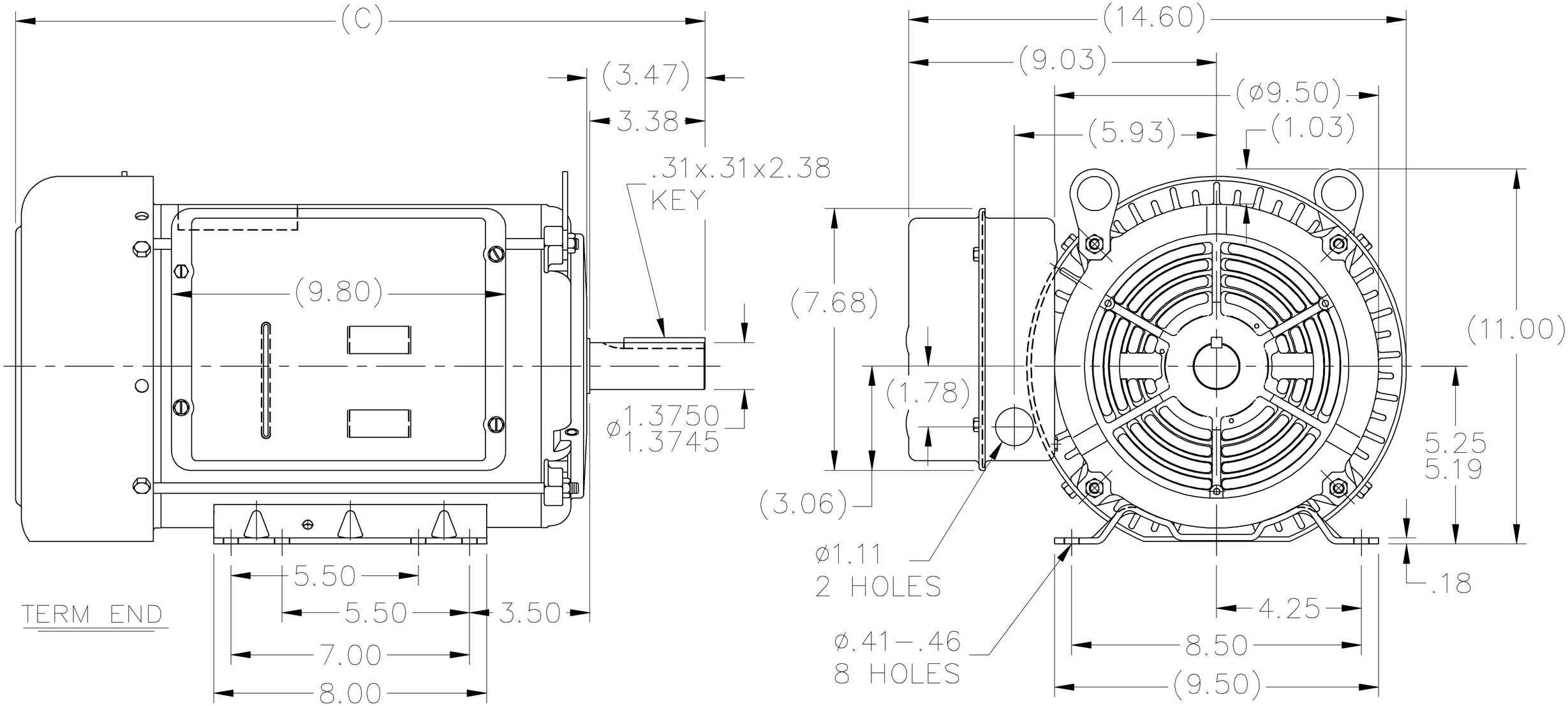

DASH	FR.	C
965	213T	18.73
1115	213/215T	20.23
1240	215T	21.48

NOTES:

1. NAMEPLATE TO BE READ FROM C'BOX SIDE OF MOTOR.

NO.	REVISION	BY & DATE	CHK
5	REDRAWN IN AUTOCAD	TAT 06-13-2005	ML
4	REMOVED 2 ADD'L ø1.38 C'BOX HOLES CN 26624	MRB 07-16-1998	
3	ADDED ADD'L ø1.38 HOLES TO C'BOX CN 26000-304	MJD 04-19-1998	
2	UPDATED BASE & C'BOX TO LATEST VERSION	MH 04-14-1997	

TOLERANCES UNLESS SPECIFIED	
DEC.	INCHES
.X	±.1
.XX	±.03
.XXX	±.005
.XXXX	±.0005
ANG	±7'30"

MARATHON ELECTRIC

TITLE OUTLINE
210T FR. – BB – TS – TEFC 1ø

MAT'L.

FINISH

DRAWN	SLJ 09-01-1994
CHK	SMC 09-02-1994
APPD	DRN 09-02-1994
SCALE	7=32
REF	
FMF	
PREV	

THIS DRAWING IN DESIGN AND DETAIL IS OUR PROPERTY AND MUST NOT BE USED EXCEPT IN CONNECTION WITH OUR WORK ALL RIGHTS OF DESIGN AND INVENTION ARE RESERVED
THIS IS AN ELECTRONICALLY GENERATED DOCUMENT – DO NOT SCALE THIS PRINT

RFP

DIST LB

CAD FILE ss86562

SIZE A

DRAWING NO. SS86562 PAGE OF

REV. 5