REVISIONS				
INT	REV	DESCRIPTION	DATE	APPROVED
JL	A	NEW RELEASE	02/08/91	ER-1044

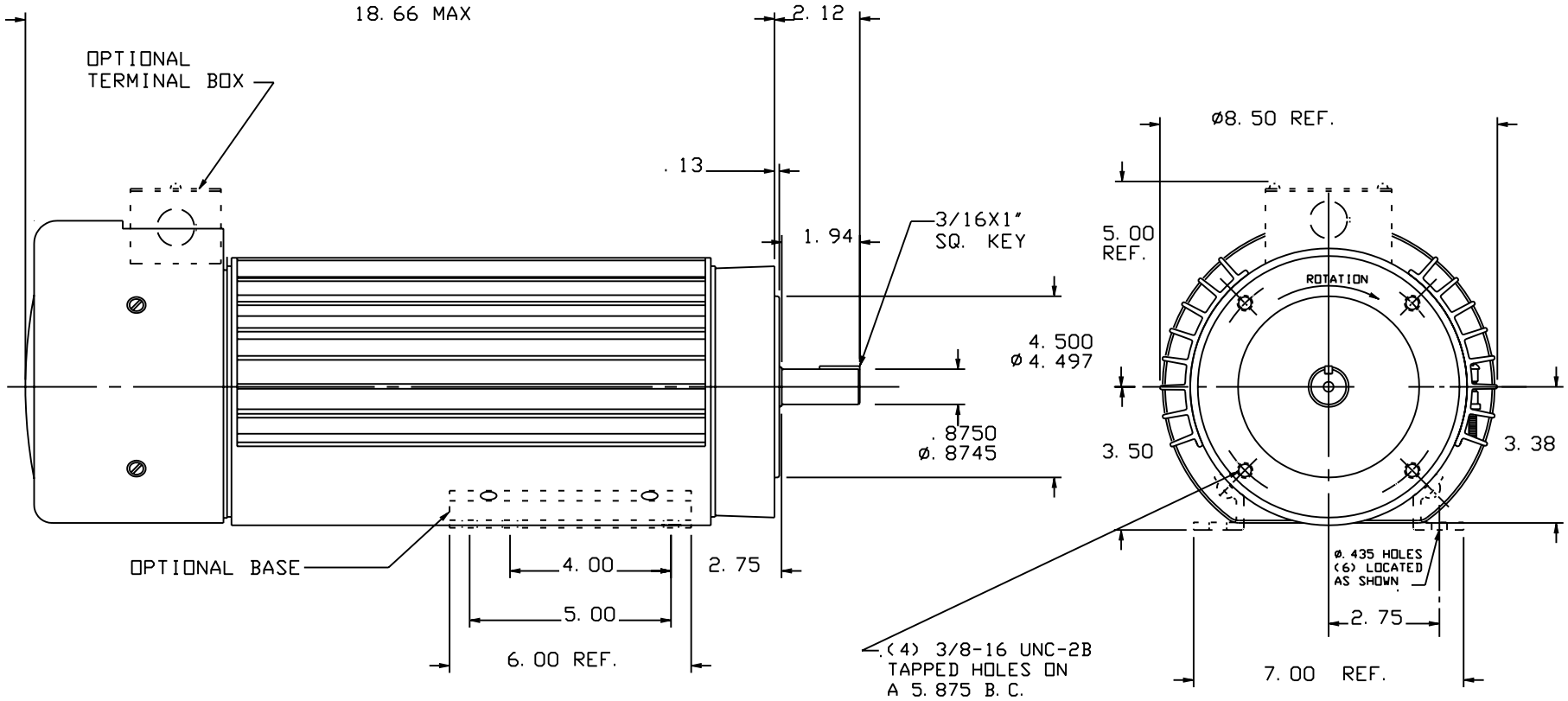

NOTE:

1) OPTIONAL CONDUIT BOX KIT PART NO. A-100294-02.
2) OPTIONAL BASE KIT PART NO. A-100195-07.
3) ROTATION IS AS SHOWN WITH POSITIVE LEAD CONNECTED TO POSITIVE TERMINAL.
4) 3.38 DIM. TO BE MEASURED FROM FLAT OF FAN COVER TO CENTER OF MOTOR.
5) 3.00 HP 1750 RPM 180 VOLTS.

MK	ITEM NUMBER	DESCRIPTION	QUANTITY	UM

BILL OF MATERIALS

DRAWN BY JL DATE 02/08/91 | CHECKED BY DATE | APPROVED BY DATE | CR NUMBER 1044

OHIO ELECTRIC MOTORS
BARNARDSVILLE, NORTH CAROLINA 28709

56 FRAME TEFC MOTOR
140TC FACE MOUNTING
143/145AT FRAME BASE

TITLE: OUTLINE DRAWING

SIZE C | FSCM NUMBER | DRAWING NUMBER 1044 SCR | REV A

SCALE | WEIGHT | SHEET SHEET 1 OF 2

CONFIDENTIAL: THIS DRAWING CONTAINS INFORMATION PROPRIETARY TO OHIO ELECTRIC MOTORS. ITS CONTENTS ARE NOT TO BE DISCLOSED TO OTHERS WITHOUT THE EXPRESSED CONSENT OF OHIO ELECTRIC MOTORS.

CADAM DRAWING
DO NOT REVISE MANUALLY

DRAWING NUMBER 1044 SCR | SHEET 1 | REV A