B-SS518551

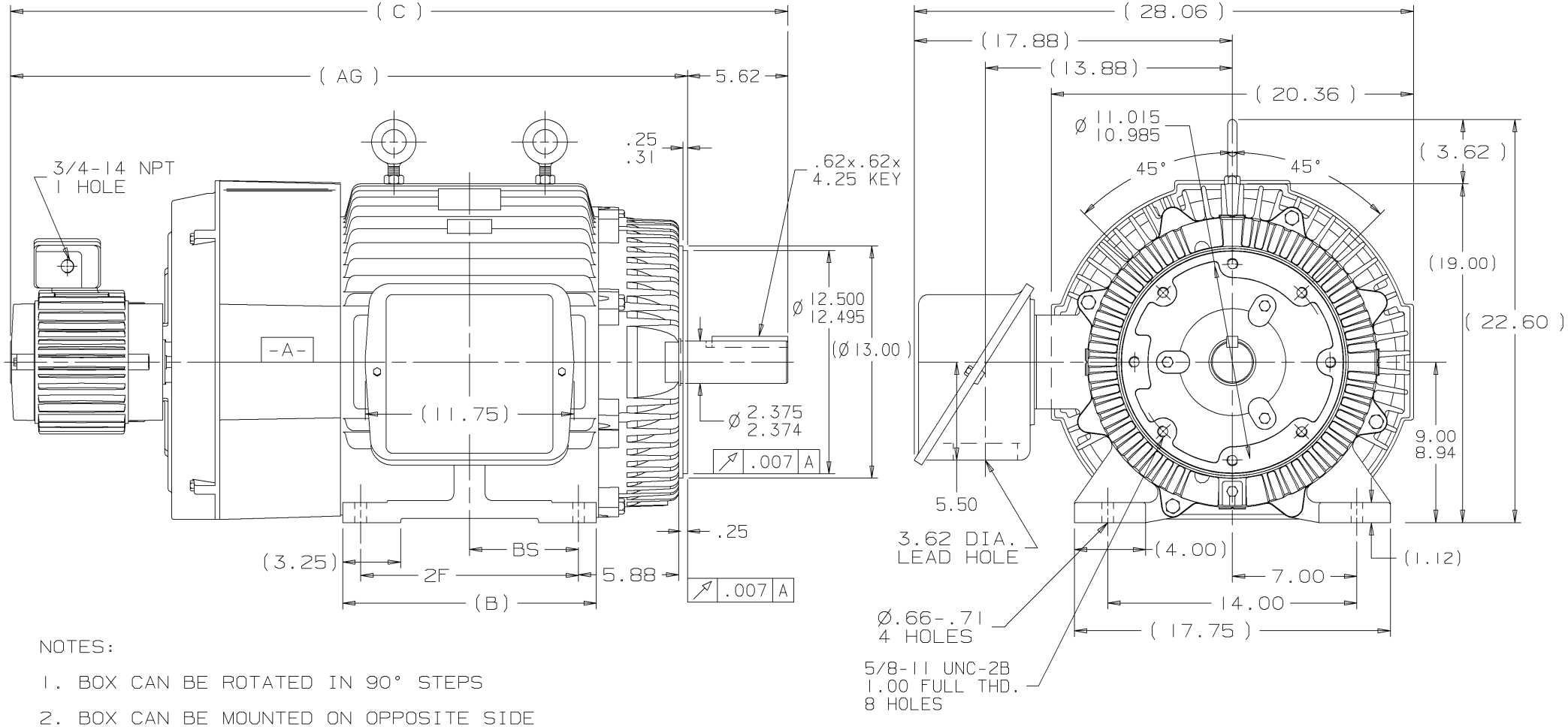

NOTES:

1. BOX CAN BE ROTATED IN 90° STEPS
2. BOX CAN BE MOUNTED ON OPPOSITE SIDE BY REMOVING BRACKETS AND TURNING FRAME 180°
3. NAMEPLATES TO BE READ FROM CONDUIT BOX SIDE OF MOTOR

DASH	FRAME	C	AG	B	2F	BS
1350	364TC	42.67	37.04	13.25	11.25	5.62
1450	365TC	43.67	38.04	14.25	12.25	6.12

REV	DATE	CHANGE	NAME
2	08-01-2001	TWO LIFTING EYES WERE ONE UPDATED REAR BRACKET CN 30955	HLB
1	06-27-2001	NEW DRAWING CN 30955	TJB

√ MAX. SURFACE ROUGHNESS UNLESS NOTED OTHERWISE

UNLESS OTHERWISE SPECIFIED DIMENSIONS ARE IN INCHES
TOL. ON XX± .03 XXX± .005 XXXX± .0005 ANGLES± 7'30"

MATL SPEC

FINISH

MARATHON ELECTRIC
WAUSAU, WISCONSIN 54401

DRAWN BY	TJB	06-21-2001
CHKD BY	ML	06-27-2001
APPD BY	GK	06-27-2001

PART NAME OUTLINE
360TC FR. - TEBC

DRWG NO B- SS518551

L | SHOP BOOK | PURCHASED | DISTRIBUTION - WA - ~~LB~~ - ~~WP~~ - ~~LM~~ - ~~BR~~ | CADD FILE NO. | SS518551