SS330123

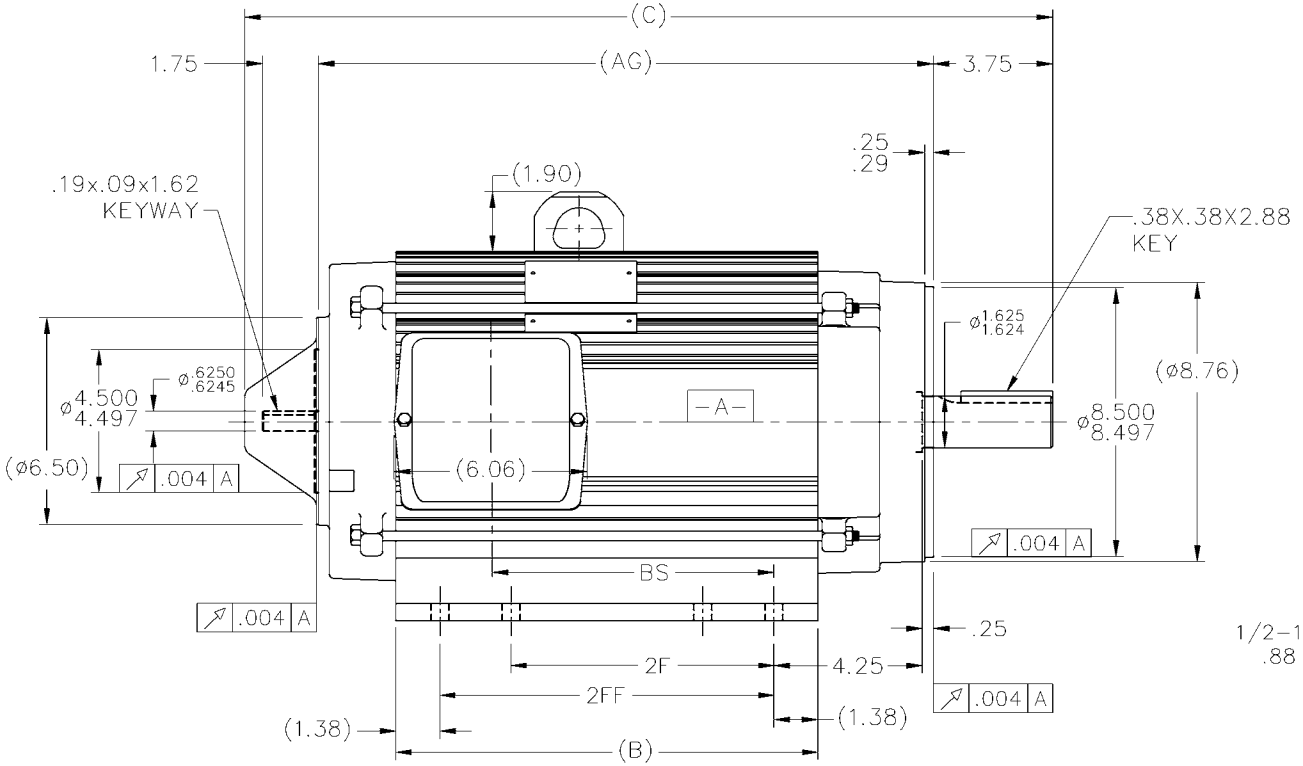

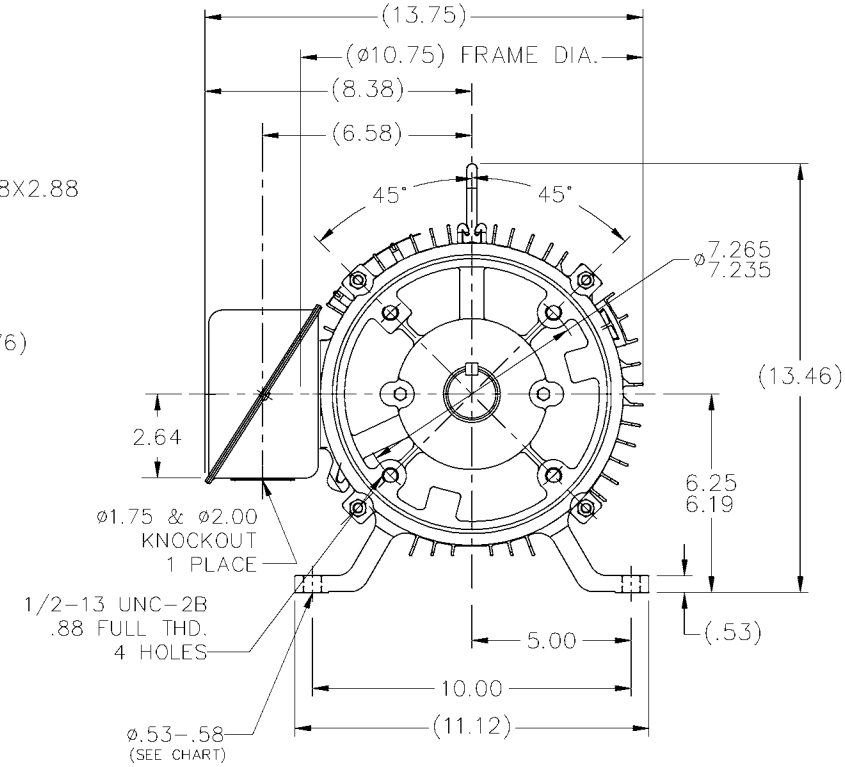

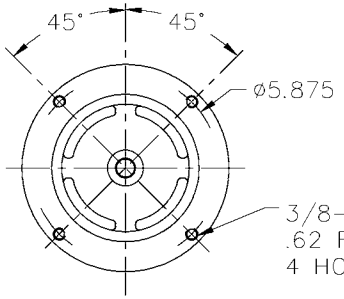

FRONT FACE DETAIL
(COVER REMOVED)

DASH	FR.	C	B	2F	2FF	AG	BS	F1/F2	NO. OF MTG. HOLES
1325	254	25.37	13.25	8.25	10.50	19.31	8.85	YES	8
1475	254	26.87	14.75	8.25	12.00	20.81	10.35	YES	8
1475	256	26.87	14.75	10.00	12.00	20.81	10.35	YES	8

NOTES:
1- BOX CAN BE ROTATED IN 180° STEPS.
2- BOX CAN BE MOUNTED ON OPPOSITE SIDE BY REMOVING BRACKETS & TURNING FRAME 180°.
3- NAMEPLATE TO BE READ FROM CONDUIT BOX SIDE OF MOTOR.

NO.	REVISION	BY & DATE	CHK
1	(1.38) WAS (1.69), UPDATED 2FF DIM'S CN 46257	TAT 11-08-2005	ML

TOLERANCES UNLESS SPECIFIED

DEC.	INCHES
X	±.1
XX	±.03
XXX	±.005
XXXX	±.0005
ANG	±7'30"

MARATHON ELECTRIC

TITLE OUTLINE - C'FACE
210 FR. - 254/56 MTG. - ALUMINUM FRAME

MAT'L.
FINISH

DRAWN RJW 08-29-2005
CHK ML 08-29-2005
APPD BW 08-30-2005
SCALE 1=4
REF
FMF
PREV

THIS DRAWING IN DESIGN AND DETAIL IS OUR PROPERTY AND MUST NOT BE USED EXCEPT IN CONNECTION WITH OUR WORK ALL RIGHTS OF DESIGN AND INVENTION ARE RESERVED
THIS IS AN ELECTRONICALLY GENERATED DOCUMENT - DO NOT SCALE THIS PRINT

RFP
DIST LB
CAD FILE ss330123
SIZE B
DRAWING NO. SS330123
PAGE OF
REV. 1