SS330105

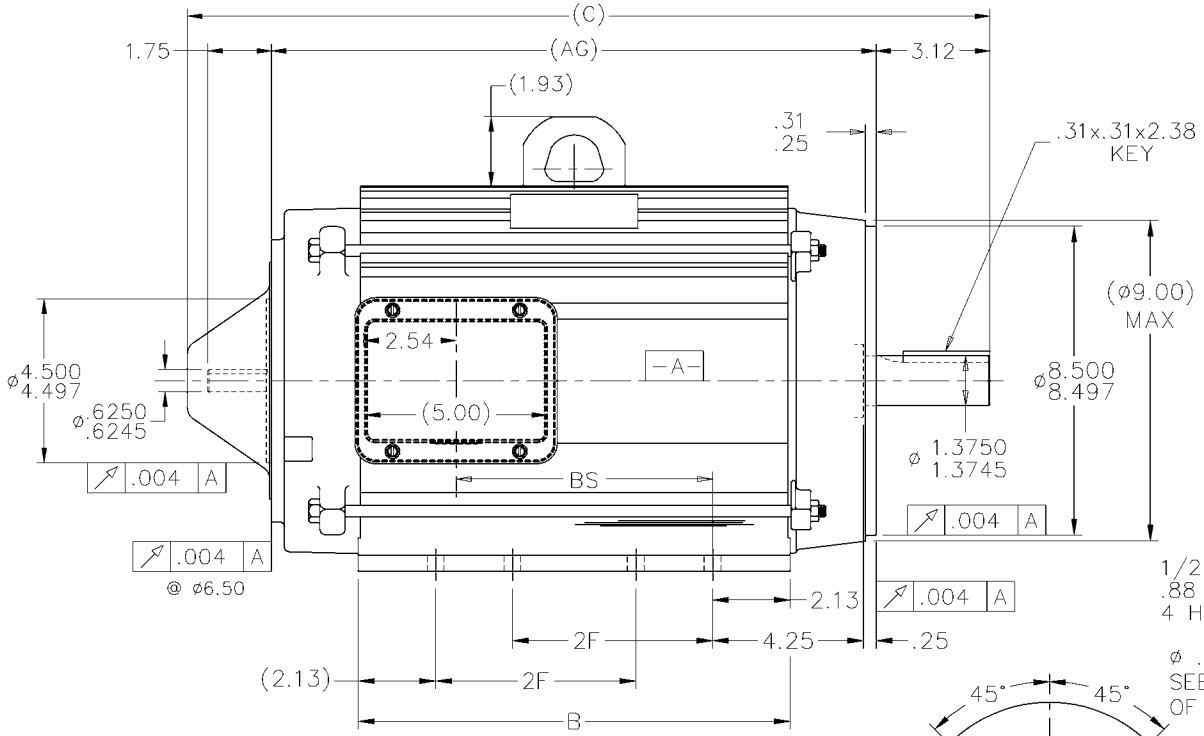

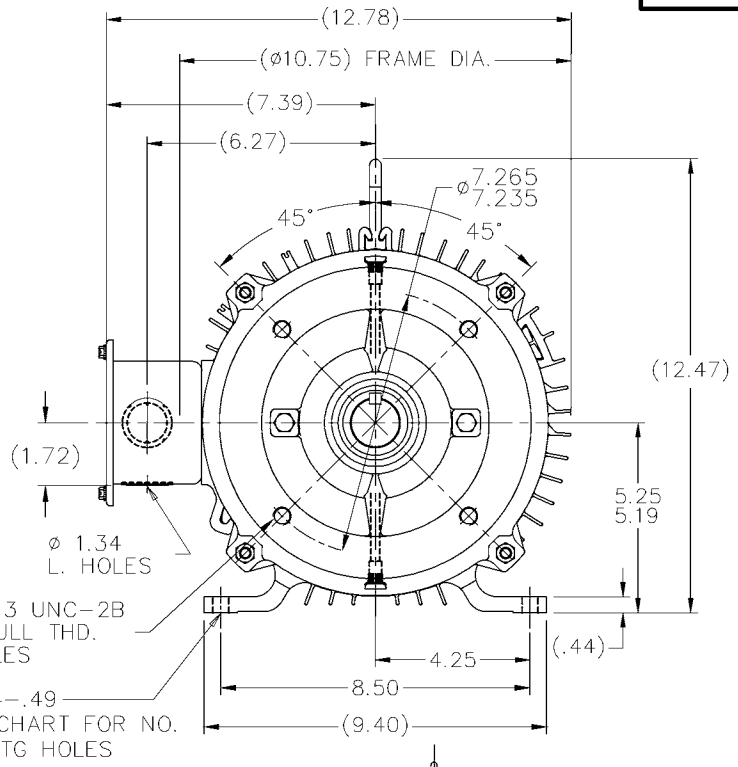

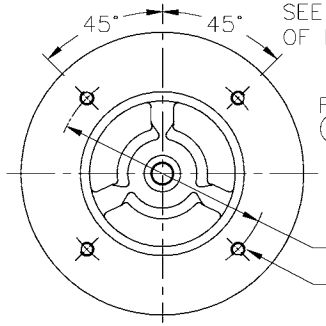

FRONT FACE DETAIL
(COVER REMOVED)

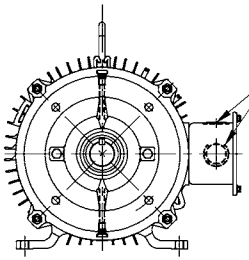

F2 C'BOX
POSITION

NOTES:
1. BOX CAN BE ROTATED IN 180° STEPS.
2. NAMEPLATE TO BE READ FROM CONDUIT BOX SIDE OF MOTOR.
3. SEE CHART FOR F2 CAPABILITY. IF YES, BOX CAN BE MOUNTED ON OPPOSITE SIDE BY REMOVING BRACKETS AND TURNING FRAME 180°

DASH	FR.	B	C	2F	AG	BS	F2 CAPABLE	NO. OF MTG HOLES
875	213	8.87	19.04	5.50	13.61	4.05	YES	8
950	213	9.62	19.79	5.50	14.36	4.80	NO	4
1025	213	10.37	20.54	5.50	15.11	5.55	YES	8
1025	215	10.37	20.54	7.00	15.11	5.55	YES	8
1115	213/215	11.27	21.44	5.50/7.00	16.01	6.45	YES	8
1175	213	11.87	22.04	5.50	16.61	7.05	YES	8
1175	215	11.87	22.04	7.00	16.61	7.05	NO	4
1275	213	12.87	23.04	5.50	17.61	8.05	YES	8
1275	215	12.87	23.04	7.00	17.61	8.05	YES	8

NO.	REVISION	BY & DATE	CHK
1	-1025 CHANGED F2 CAP. TO YES/8 HOLES ECN 7778	TAT 02-27-2006	ML

TOLERANCES UNLESS SPECIFIED

DEC.	INCHES
X	±.1
XX	±.03
XXX	±.005
XXXX	±.0005
ANG	±1/2°

MARATHON ELECTRIC

TITLE OUTLINE
210 FR. – TENV – DBL. C' FACE

MAT'L.
FINISH

DRAWN MKLEIST 02-22-05
CHK ML 09-29-05
APPD CDG 09-29-05
SCALE 1=3.5
REF
FMF
PREV

THIS DRAWING IN DESIGN AND DETAIL IS OUR PROPERTY AND MUST NOT BE USED EXCEPT IN CONNECTION WITH OUR WORK ALL RIGHTS OF DESIGN AND INVENTION ARE RESERVED
THIS IS AN ELECTRONICALLY GENERATED DOCUMENT – DO NOT SCALE THIS PRINT

RFP
DIST
CAD FILE ss330105
SIZE B
DRAWING NO. SS330105
PAGE 1 OF 1
REV. 1